PRODUCT SPECIFICATION

DYNAMIC TRIM CONTROL SYSTEM

SERIES S

ZIPWAKE

CHOOSE COMFORT. ENJOY PERFORMANCE.

PRODUCT SPECIFICATION
DYNAMIC TRIM CONTROL SYSTEM SERIES S

Part number: 1010130
Release: R1M, October 2019
Language: English

Copyright © 2019 Zipwake AB, Sweden. All rights reserved.

TABLE OF CONTENTS

1 INTRODUCTION 4
1.1 MOTION CONTROL FEATURES
1.2 PRODUCTS AND PARTS OVERVIEW

2 KIT BOXES 7
2.1 KIT BOX CONTENTS
2.2 SPECIFICATIONS
2.3 ORDERING DATA

3 CONTROL PANEL 9
3.1 FEATURES
3.2 SPECIFICATIONS
3.3 INTERFACES
3.4 DIMENSIONS
3.5 ORDERING DATA

4 INTERCEPTORS 11
4.1 FEATURES
4.2 SPECIFICATIONS
4.3 ORDERING DATA
4.4 DIMENSIONS

5 DISTRIBUTION UNIT 20
5.1 SPECIFICATIONS
5.2 CONNECTORS
5.3 DIMENSIONS
5.4 ORDERING DATA

6 CABLES 22
6.1 SPECIFICATIONS
6.2 ORDERING DATA

7 CONTROL PANEL ALU FRAME 23
7.1 SPECIFICATIONS
7.2 ORDERING DATA

8 CONTROL PANEL COVER 23
8.1 SPECIFICATIONS
8.2 ORDERING DATA

9 CONTROL PANEL GIMBAL BRACKET 24
9.1 SPECIFICATIONS
9.2 DIMENSIONS
9.3 ORDERING DATA

10 CABLE COVER 25
10.1 SPECIFICATIONS
10.2 DIMENSIONS
10.3 ORDERING DATA

11 SERVO UNIT 26
11.1 SPECIFICATIONS
11.2 ORDERING DATA

12 INTERCEPTOR FRONTS 27
12.1 SPECIFICATIONS
12.2 DIMENSIONS
12.3 ORDERING DATA

13 EXTERNAL GPS ANTENNA 28
13.1 APPLICATION
13.2 SPECIFICATIONS
13.3 DIMENSIONS
13.4 PIN OUT
13.5 ORDERING DATA

14 WIRING DIAGRAM 30

1 INTRODUCTION

The Dynamic Trim Control System Series S incorporates a state-of-the-art family of durable, fast-acting Interceptors and unique 3D controls which provide the driver with unmatched, user-friendly, intuitive and precise control of running trim, heel or heading. The system is fully automatic and significantly enhances the boat's performance, fuel economy, comfort and safety.

KEY FEATURES

COMFORT AND SAFETY
Dynamically eliminates uncomfortable and dangerous boat pitch and roll.

PERFORMANCE AND FUEL ECONOMY
Automatically minimizes wave resistance and saves fuel.

INTUITIVE AND PRECISE CONTROL
Innovative 3D controls provide unmatched control of running trim, heel or heading.

DURABLE AND EFFECTIVE
Patented series of durable fast-acting interceptors provide supreme lift force characteristics.

COMPLETE AND COMPETITIVE
All-inclusive mass-produced modular design provides built-in quality, simple installation and easy expansion, while making the system affordable.

EXTERNAL MONITORING AND SYSTEM CONTROL
The system can be monitored and/or controlled from external devices, e.g. multifunction displays or plotters via its NMEA 2000® interface. A programming manual provides comprehensive information on NMEA 2000 system integration.

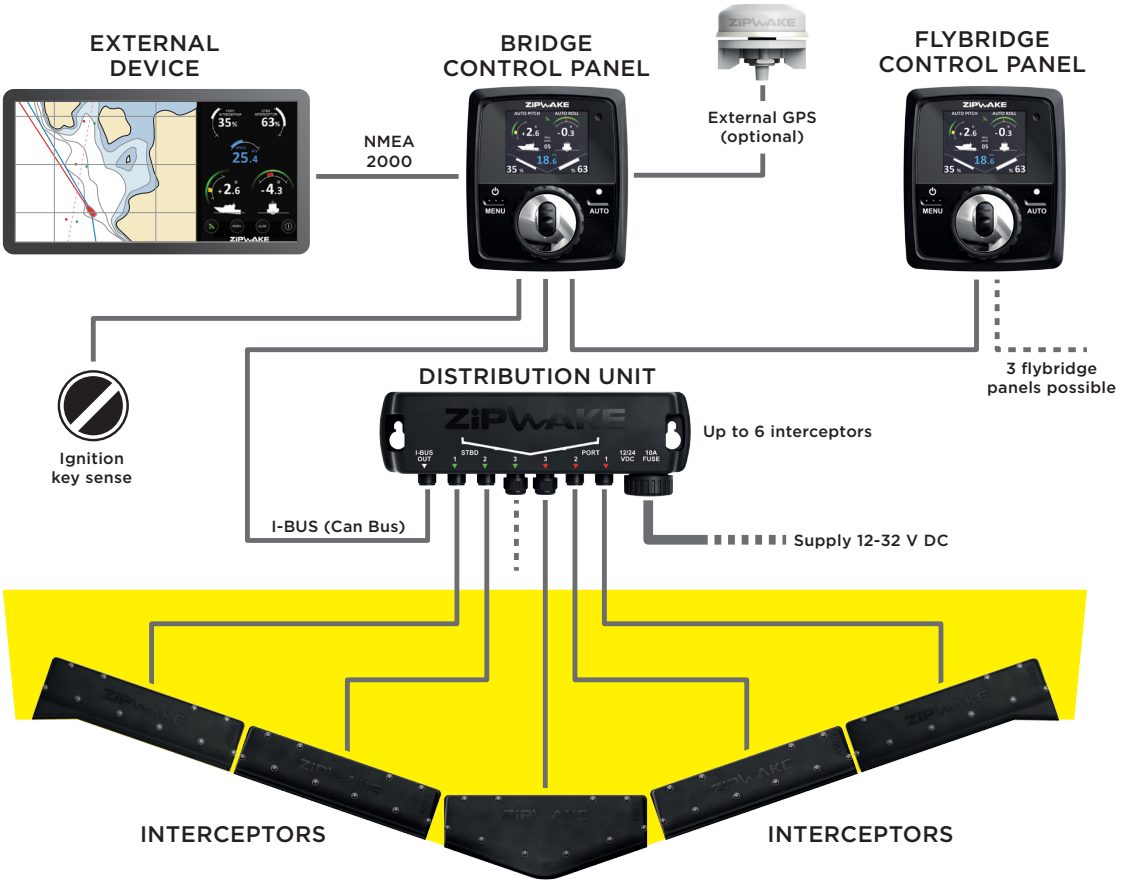

1.1 MOTION CONTROL FEATURES

Mode	Motion	Feature	Standard	Future
Automatic	Roll	Active roll control	●	
		Advanced turn recognition	●	
		Coordinated turn	●	
		Easy sensitivity control	●	
	Pitch	Curve-based pitch control	●	
		Pitch-offset control with quick save	●	
		Easy manipulation of pitch control curve	●	
		Basic pitch control curve from boat dimensions	●	
	Yaw	Auxiliary steering, controllable by other onboard system		●
Manual	Roll	List control	●	
		Speed-progressive control wheel	●	
	Pitch	Trim control	●	
		Speed-progressive control wheel	●	
	Yaw	Steering control (calm sea or emergency steering)	●	
		Speed-progressive control wheel	●	

For details, refer to the Operator's Manual.

1.2 PRODUCTS AND PARTS OVERVIEW

Zipwake products and parts come as Kit Boxes, accessories or spare parts.

			Kit Box contents					
		Kit Box Part No.	2011145	2011146	2011147	2011148		
Model	Part No.	Description	KB300-S	KB450-S	KB600-S	KB750-S	Accessory	Spare Part
CP-S	2011238	Control Panel S with Standard Cable 7 M	1	1	1	1	●	●
DU-S	2011239	Distribution Unit S with Power Cable 4 M	1	1	1	1	●	●
IT300-S	2011232	Interceptor 300 S with Cable 3 M & Cable Covers	2				●	●
IT450-S	2011233	Interceptor 450 S with Cable 3 M & Cable Covers		2			●	●
IT600-S	2011234	Interceptor 600 S with Cable 3 M & Cable Covers			2		●	●
IT750-S	2011235	Interceptor 750 S with Cable 3 M & Cable Covers				2	●	●
IT450-S V13	2011482	Interceptor 450 S V13 with Cable 3 M & Cable Covers					●	●
IT450-S V16	2011483	Interceptor 450 S V16 with Cable 3 M & Cable Covers					●	●
IT450-S V19	2011484	Interceptor 450 S V19 with Cable 3 M & Cable Covers					●	●
IT450-S V22	2011485	Interceptor 450 S V22 with Cable 3 M & Cable Covers					●	●
EC1.5-M12	2011258	M12 Extension Cable 1.5 M					●	●
EC3-M12	2011259	M12 Extension Cable 3 M					●	●
EC5-M12	2011260	M12 Extension Cable 5 M					●	●
EC10-M12	2011261	M12 Extension Cable 10 M					●	●
SC7-M12	2011257	M12 Standard Cable 7 M					●	●
CP ALU FRAME	2011281	Control Panel Alu Frame					●	●
CP COVER	2011381	Control Panel Cover, White					●	●
	2011382	Control Panel Cover, Light gray					●	●
	2011383	Control Panel Cover, Mid gray					●	●
	2011384	Control Panel Cover, Dark gray					●	●
	2011385	Control Panel Cover, Black					●	●
CC-S	2011071	Cable Cover S Kit					●	●
GPU	2011240	Global Positioning Unit with Cable 5 M & Mount Kit					●	●
SU-S	2011230	Servo Unit S with Cable 3 M						●
IT300-S FRONT	2011252	Interceptor 300 S Front						●
IT450-S FRONT	2011253	Interceptor 450 S Front						●
IT600-S FRONT	2011254	Interceptor 600 S Front						●
IT750-S FRONT	2011255	Interceptor 750 S Front						●
IT450-S V13 FRONT	2011492	Interceptor 450 S V13 Front						●
IT450-S V16 FRONT	2011493	Interceptor 450 S V16 Front						●
IT450-S V19 FRONT	2011494	Interceptor 450 S V19 Front						●
IT450-S V22 FRONT	2011495	Interceptor 450 S V22 Front						●

			Kit Box contents			
		Kit Box Part No.	2011732	2011733		
Model	Part No.	Description	KB300-S CHINE	KB450-S CHINE	Accessory	Spare Part
CP-S	2011238	Control Panel S with Standard Cable 7 M	1	1	●	●
DU-S	2011239	Distribution Unit S with Power Cable 4 M	1	1	●	●
IT300-S CHINE PORT	2011702	Interceptor 300 S Chine Port side with Cable 3 M & Cable Covers	1		●	●
IT300-S CHINE STBD	2011703	Interceptor 300 S Chine Starboard side with Cable 3 M & Cable Covers	1		●	●
IT450-S CHINE PORT	2011704	Interceptor 450 S Chine Port side with Cable 3 M & Cable Covers		1	●	●
IT450-S CHINE STBD	2011705	Interceptor 450 S Chine Starboard side with Cable 3 M & Cable Covers		1	●	●
IT300-S INTER	2011701	Interceptor 300 S Intermediate with Cable 3 M & Cable Covers			●	●
IT300-S CHINE PORT FRONT	2011742	Interceptor 300 S Chine Port side Front				●
IT300-S CHINE STBD FRONT	2011743	Interceptor 300 S Chine Starboard side Front				●
IT450-S CHINE PORT FRONT	2011744	Interceptor 450 S Chine Port side Front				●
IT450-S CHINE STBD FRONT	2011745	Interceptor 450 S Chine Starboard side Front				●
IT300-S INTER FRONT	2011741	Interceptor 300 S Intermediate Front				●
GB	2011622	Gimbal Bracket for Control Panel			●	●

2 KIT BOXES

A Kit Box includes all parts needed to install a Dynamic Trim Control System with one pair of fast-acting interceptors. There are four different Kit Boxes with straight interceptors, one for each interceptor length, and two different Kit Boxes with chine interceptors.

Kit Boxes - Straight

- Kit Box 300 S
- Kit Box 450 S
- Kit Box 600 S
- Kit Box 750 S

Kit Boxes - Chine

- Kit Box 300 S Chine
- Kit Box 450 S Chine

2.1 KIT BOX CONTENTS

Each Kit Box includes:

INTERCEPTOR

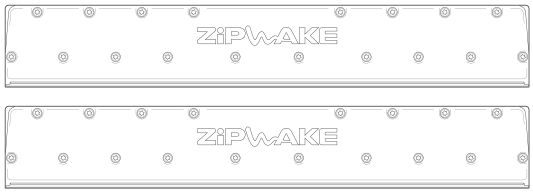

2 x Interceptors
with Cable 3 m & Cable Covers

DISTRIBUTION UNIT

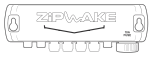

1 x Distribution Unit
with Power Cable 4 m

CONTROL PANEL

1 x Control Panel
with Standard Cable 7 m

+ Operator's Manual
+ Warranty Card
+ Installation Guide
+ Drill Templates
+ Operator's Quick Guide
+ Startup Checklist

Any base installation can be expanded with up to two extra pairs of Series S interceptors, thus allowing a total of six interceptors without any need for additional connectors or power supply.

2.2 SPECIFICATIONS

Model	KB300-S	KB450-S	KB600-S	KB750-S	KB300-S CHINE	KB450-S CHINE	
Width	680 (26.8)	680 (26.8)	980 (38.6)	980 (38.6)	680 (26.8)	680 (26.8)	mm (in)
Depth	156 (6.1)	156 (6.1)	156 (6.1)	156 (6.1)	156 (6.1)	156 (6.1)	mm (in)
Height	274 (10.8)	274 (10.8)	274 (10.8)	274 (10.8)	274 (10.8)	274 (10.8)	mm (in)
Weight	6.9 (15.2)	8.4 (18.5)	10.4 (22.9)	11.5 (25.4)	7.1 (15.7)	8.6 (19)	kg (lbs)

See section 1.2 for details of the contents of each Kit Box.

2.3 ORDERING DATA

Model	KB300-S	KB450-S	KB600-S	KB750-S	KB300-S CHINE	KB450-S CHINE	
Part No.	2011145	2011146	2011147	2011148	2011732	2011733	

3 CONTROL PANEL

Zipwake's stylish control panel is carefully designed to be user-friendly and intuitive to allow the driver to focus on the right thing – enjoying the boat ride!

The panel's two unique control wheels provide easy, quick and intuitive manual control of running trim, heel or heading. However, the system normally operates in automatic control mode, which is enabled by a single press on the AUTO button. In this mode, the built-in high-frequency GPS, 3D gyro sensors and robust motion controller automatically ensure dynamic elimination of un-comfortable and dangerous boat pitch and roll.

The system provides continuous feedback of boat speed, pitch and roll angle, as well as the interceptors' positions, on a 2.4" sunlight-readable wide viewing color display.

The panel's waterproof design withstands harsh marine conditions in open boats or on a flybridge. The sockets for connecting peripherals are located on the rear of the panel. In addition to connectors for the system's distribution unit and multiple control panels, external GPS and NMEA2000 equipment can be connected. The system can also be connected to the ignition key for automatic system power-on. A waterproof cap conceals the USB interface that allows for future software upgrades and ensures that the Zipwake Dynamic Trim Control System is future-proof.

3.1 FEATURES

- Fully automatic
  - Dynamic pitch and roll control
  - Steering and turn enhancement
- Built-in GPS and motion sensors
- Unique and intuitive 3D controls
- Sunlight readable color display
- Instant state user feedback
- Auto power on/off via ignition key sense
- Full range of electrical interfaces
- Waterproof
- Auto dimming / night mode
- Upgradable via USB stick
- Up to four control panels in the system
- Surface, flush or gimbal bracket mount
- Manages installation configurations from 1 up to 6 interceptors
- Auto Cleaning
  - Selectable periodic cleaning cycle
  - Prevents fouling inside the interceptor
- Monitored and/or controlled from external devices, e.g. multifunction displays or plotters via its NMEA 2000 interface

3.2 SPECIFICATIONS

Model	CP-S
Display	2.4” IPS color TFT LCD, 320 x 240 pixels, double-sided, anti-reflection coated window
Internal sensors	5 Hz GPS, 3D Gyro, 3D Accelerometer, Ambient light
Supply voltage	12 - 32 V DC
Power consumption	10 W max
Operating temperature	-20° to +85°C (-4° to +185°F)
Storage temperature	-40° to +90°C (-40° to +194°F)
Waterproof rating	IP67 / IP64 (front / back)
Compass safe distance	0.5 m (1.7 ft)
Compliance	CE, FCC
Weight	0.22 kg (0.49 lbs)
Mounting	Surface, flush or gimbal bracket mount

3.3 INTERFACES

- I-BUS IN (CAN bus)
- I-BUS OUT (CAN bus)
- NMEA 2000
- Key sense
- USB Device Port (Type A)
- USB Host Port (Type B)
- External GPS (NMEA 0183 / RS232 auto baud-rate sensing)

3.4 DIMENSIONS

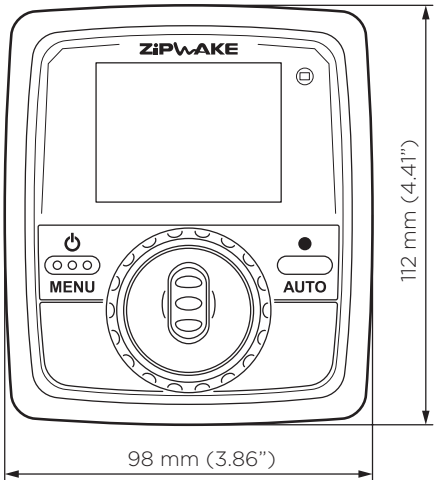

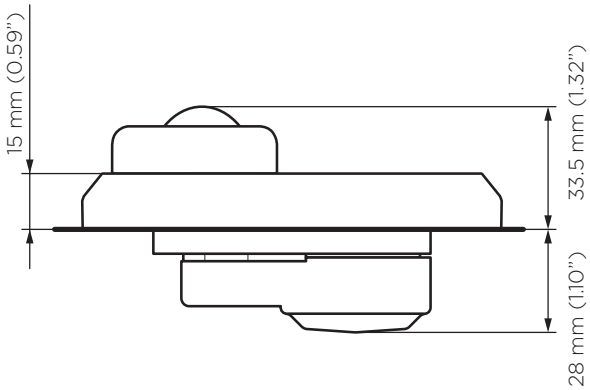

3.5 ORDERING DATA

Model	CP-S
Part No.	2011238 with Standard Cable 7 m

- Included in Kit Boxes
- Available as an accessory
- Available as a spare part

4 INTERCEPTORS

Series S is a product family that includes four straight, four V-shaped, four chine and one intermediate interceptor. This first-ever modular design made for mass production makes the interceptors durable, affordable and perfectly adapted to any planing or semi-planing boat between 6 m and 15 m (20-50 ft).

All components have been meticulously engineered to withstand impact and avoid water ingress, minimizing the risk of costly maintenance and downtime. Interceptor or blade actuation takes place by way of a calibration-free submersible electric servo in the interceptor unit. Its natural water cooling provides excellent working conditions for the brushless DC servo motor, which run on 12-32 volts. The blade stroke takes 1.5 seconds, outperforming conventional trim tabs by at least a factor of 5.

Installation is made easy with an integral mounting plate and the option of a concealed or above-waterline, self-sealing, thru-hull cable fitting. The preferred mounting option is achieved by simply routing the servo cable, as shown below. Each interceptor comes with the thru-hull cable fitting, cable covers and a practical drill template.

For best effect, different size interceptors can be combined to span as much of the transom edge as possible. A full beam is always the optimal arrangement from a lift-to-drag ratio point of view.

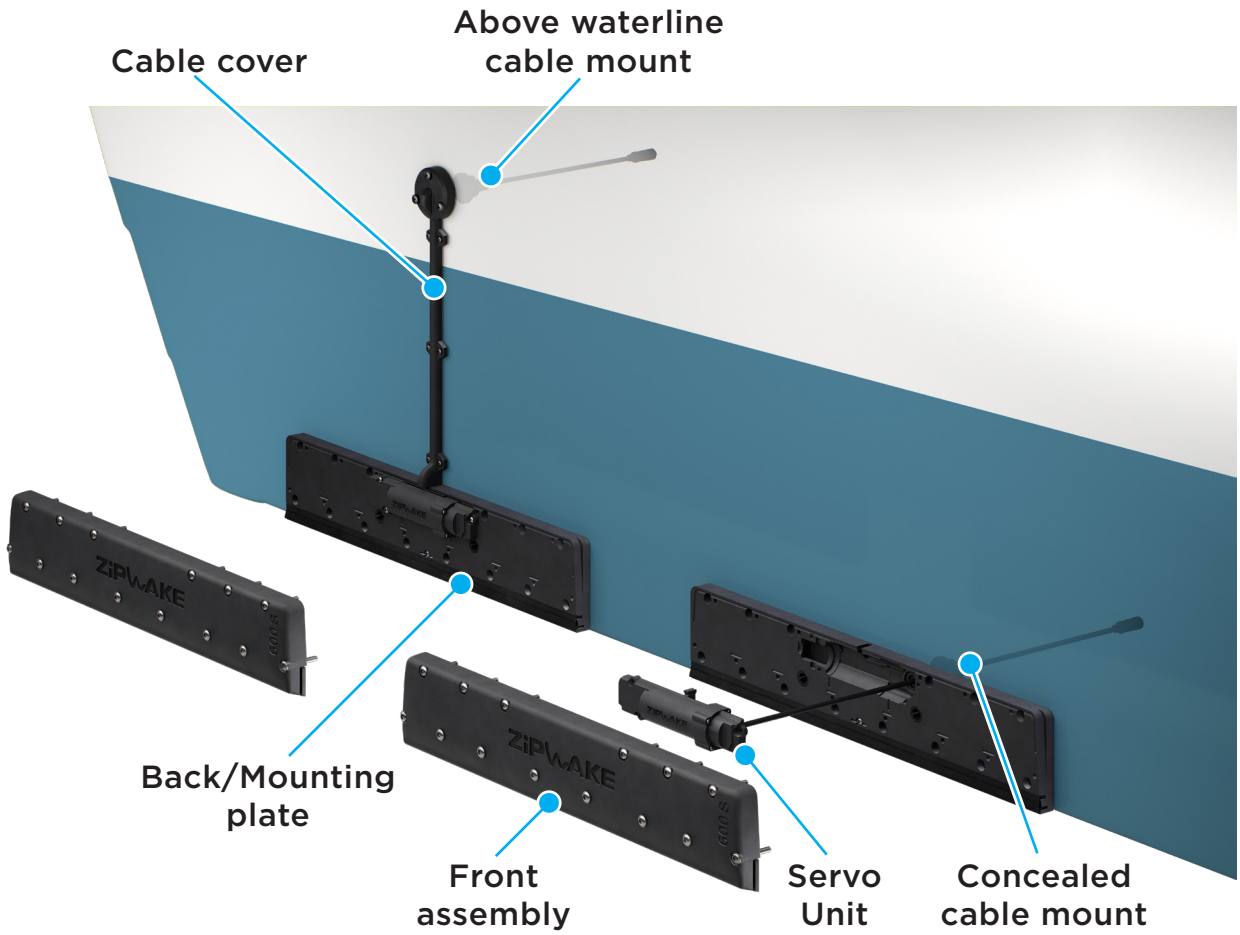

V-shaped interceptors for centerline mounting

V-shaped interceptors for centerline mounting are perfect for filling the gap between twin outboards or sterndrives, as well as dual propeller tunnels.

The four V-shaped models cover deadrise angles effectively between 11 to 24 degrees. Centerline mounted interceptors can be included in new installations, or retro-fitted to already installed systems.

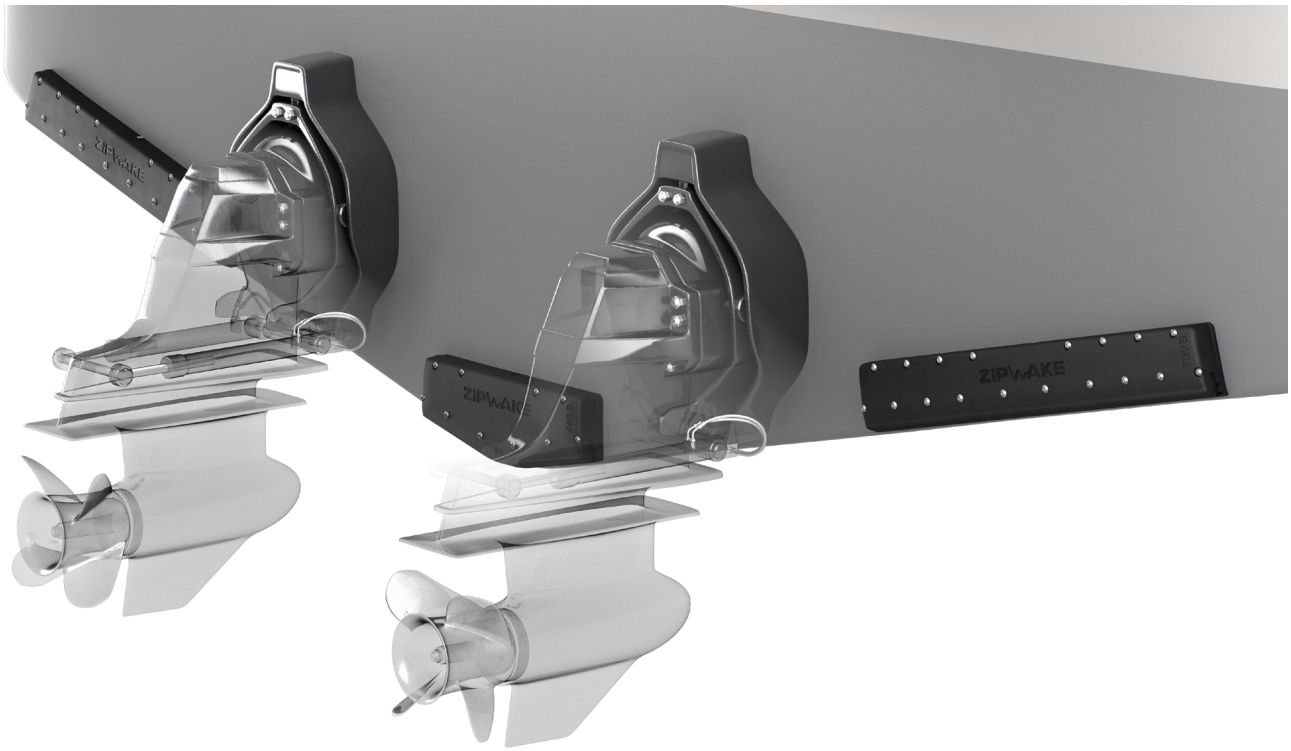

Chine interceptors for maximum lift

Chine interceptors provide a unique means of maximizing pitch and roll motion control by utilizing the furthest outboard surfaces of the hull bottom for lift generation.

As a rule, the lift effect of a chine interceptor matches the lift of a straight interceptor one size larger mounted inboard of the chine, making them the go-to choice when selecting interceptors. Chine interceptors are particularly useful when transom space is limited abeam of outboards or sterndrives.

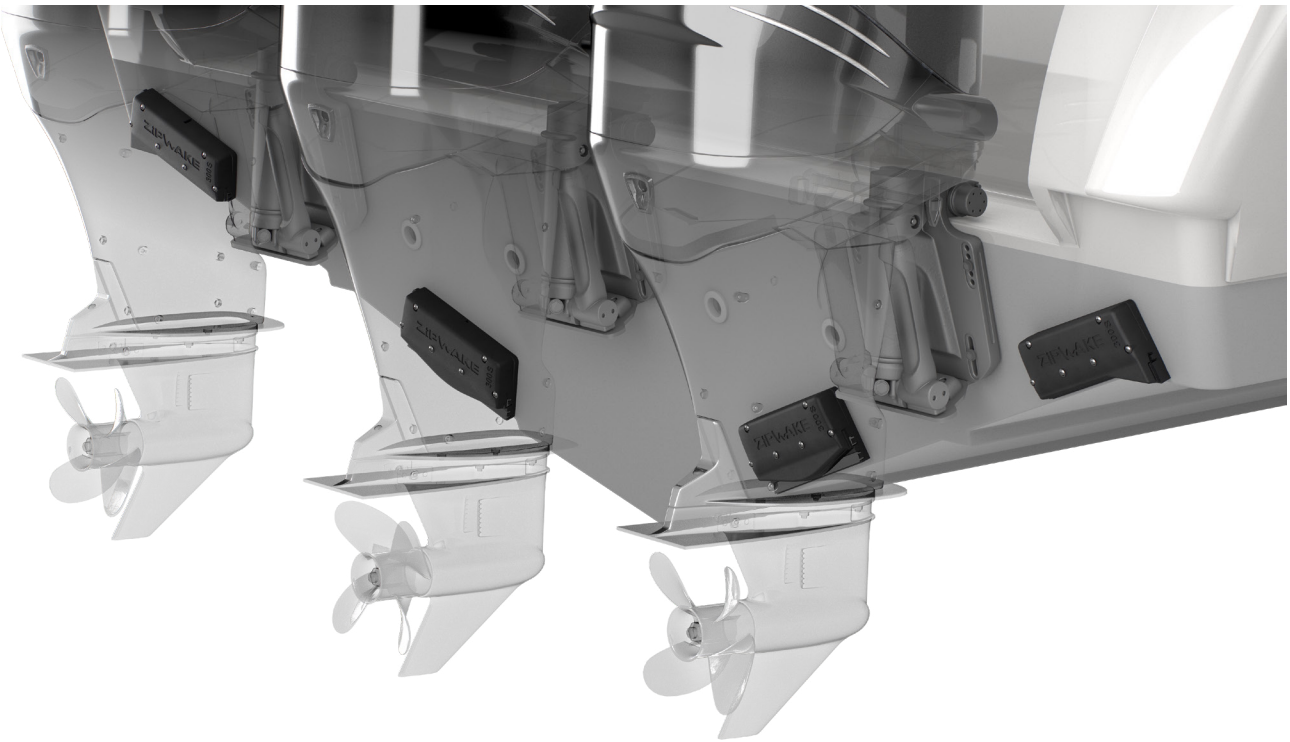

Intermediate interceptor for installing close to propellers

When space between multiple outboards or sterndrives is tight, an intermediate interceptor offers a viable alternative for additional pitch and roll motion control not possible with a straight interceptor without degrading propeller performance.

Thanks to their special blade shape, intermediate interceptors generate a narrower trail, thus mitigating propeller inflow disturbance and even allowing installation between outboards mounted at their minimum offset.

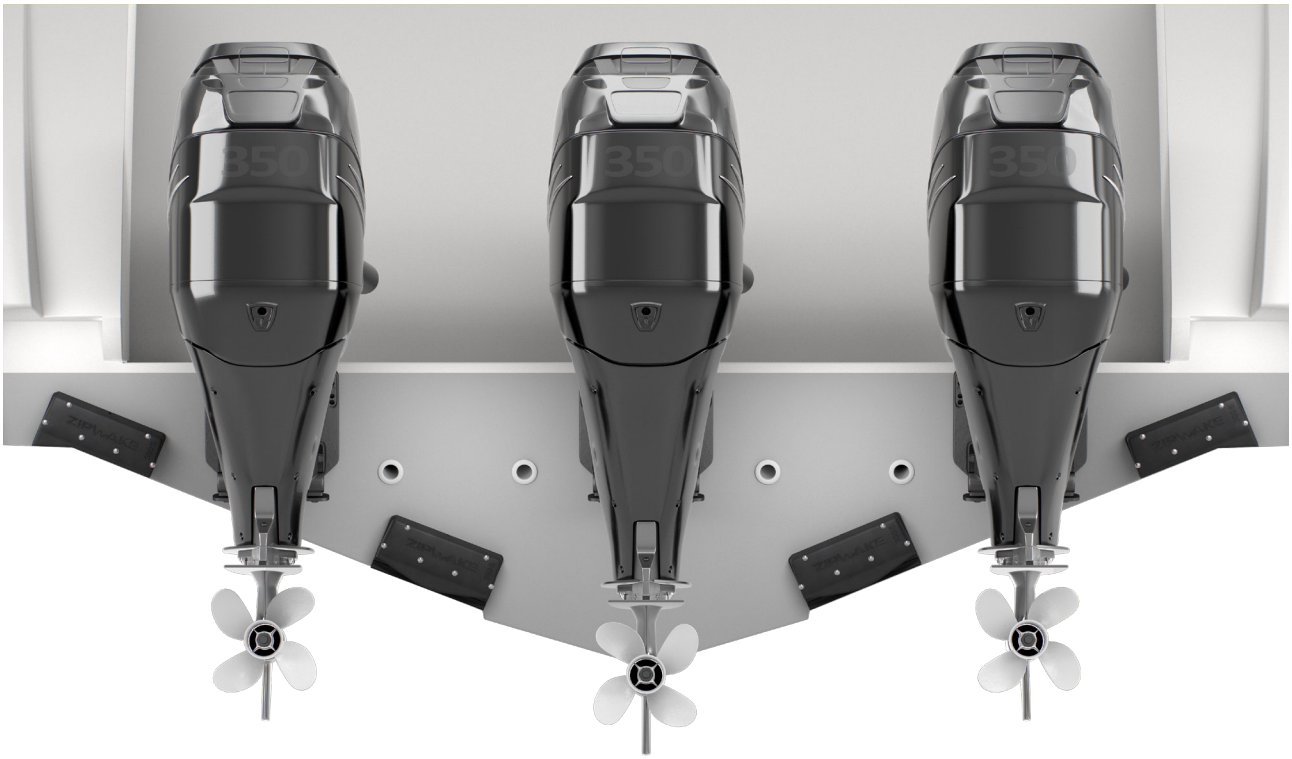

The modular design enables boat designers to develop their own novel applications, e.g. in multihulls or stepped hull high-speed craft.

4.1 FEATURES

- True outboard mount
- Modular design
- Fast actuation
- Straight, V-shaped, chine and intermediate models
- Integrated mounting plate
- Thru-hull fitting options
  - Above waterline
  - Concealed behind interceptor
- Submersible servo units
  - Brushless 12-24V DC servo motor
  - High-precision positioning
  - Calibration free
  - Durable and accessible
- Auto Cleaning
  - Periodically selectable cleaning cycle
  - Prevents fouling inside the interceptor
- No corrosive materials

4.2 SPECIFICATIONS

Model	IT300-S	IT450-S	IT600-S	IT750-S	
Length	300 (12)	450 (18)	600 (24)	750 (30)	mm (in)
Weight	2.1 (4.6)	2.8 (6.2)	3.5 (7.7)	4.0 (8.8)	kg (lbs)

Model	IT450-S V13	IT450-S V16	IT450-S V19	IT450-S V22	
Length	450 (18)	450 (18)	450 (18)	450 (18)	mm (in)
Weight	3.2 (7.1)	3.3 (7.3)	3.4 (7.5)	3.5 (7.7)	kg (lbs)

Model	IT300-S CHINE PORT	IT300-S C CHINE STBD	IT450-S CHINE PORT	IT450-S CHINE STBD	
Length	300 (12)	300 (12)	450 (18)	450 (18)	mm (in)
Weight	2.2 (4.9)	2.2 (4.9)	2.9 (6.4)	2.9 (6.4)	kg (lbs)

Model	IT300-S INTER				
Length	300 (12)				mm (in)
Weight	2.4 (5.3)				kg (lbs)

Max. boat speed	60 knots
Blade stroke	30 mm (1.2 in)
Blade rate	20 mm/s (0.8 in/s)
Thru-hull cable fitting	Concealed or above waterline
Servo actuator	SU-S
Cable length	3 m (10 ft), extendable up to 6 m (20 ft)
Cable material	PUR
Connector	M12 5-pin circular
Connector diameter	14.5 mm (0.57 in)
Supply voltage	12 - 32 V DC
Power consumption	25 W max
Operating temperature	0° to +40°C (+32° to +104°F)
Storage temperature	-40° to +90°C (-40° to +194°F)
Waterproof rating	IP68 5 m (16 ft)
Compliance	CE, FCC

4.3 ORDERING DATA

Model	IT300-S	IT450-S	IT600-S	IT750-S
Part No.	2011232	2011233	2011234	2011235
	Comes with Cable 3 m and Cable Covers			

- Included in Kit Boxes
- Available as an accessory
- Available as a spare part

Model	IT450-S V13	IT450-S V16	IT450-S V19	IT450-S V22
Part No.	2011482	2011483	2011484	2011485
	Comes with Cable 3 m and Cable Covers			

- Available as an accessory
- Available as a spare part

Model	IT300-S CHINE PORT	IT300-S CHINE STBD	IT450-S CHINE PORT	IT450-S CHINE STBD
Part No.	2011702	2011703	2011704	2011705
	Comes with Cable 3 m and Cable Covers			

- Included in Kit Boxes
- Available as an accessory
- Available as a spare part

Model	IT300-S INTER			
Part No.	2011701			
	Comes with Cable 3 m and Cable Covers			

- Available as an accessory
- Available as a spare part

4.4 DIMENSIONS

IT750-S

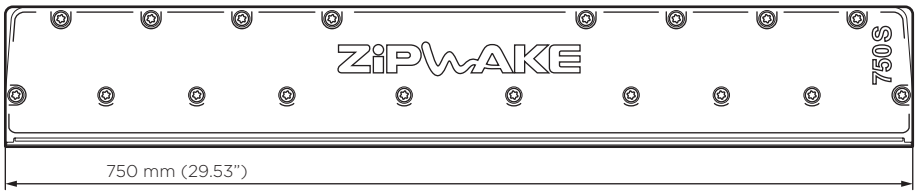

IT600-S

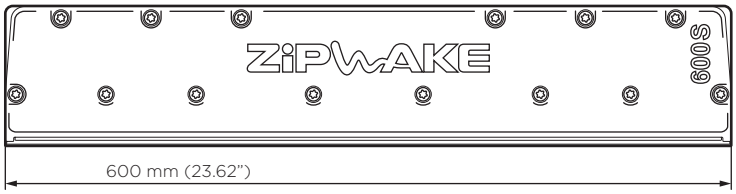

IT450-S

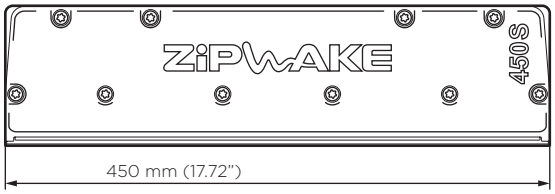

IT300-S

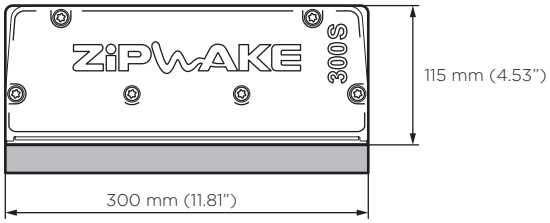

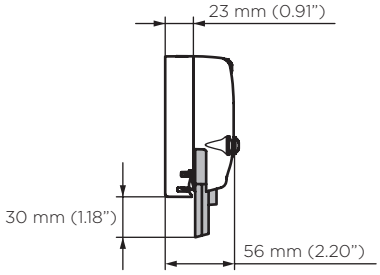

IT450-S V13

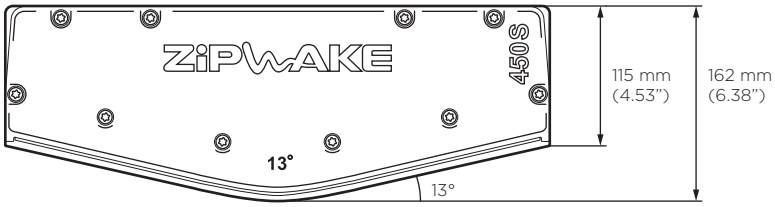

IT450-S V16

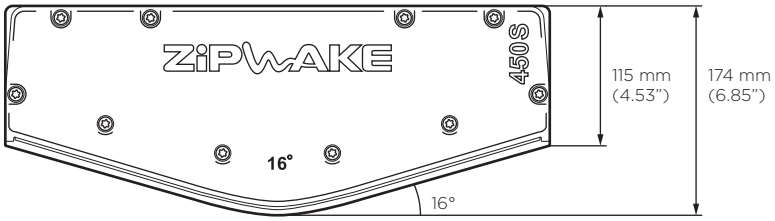

IT450-S V19

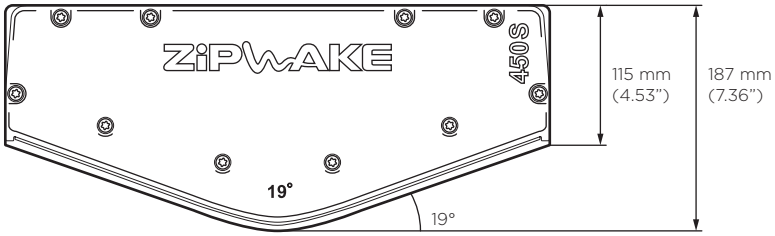

IT450-S V22

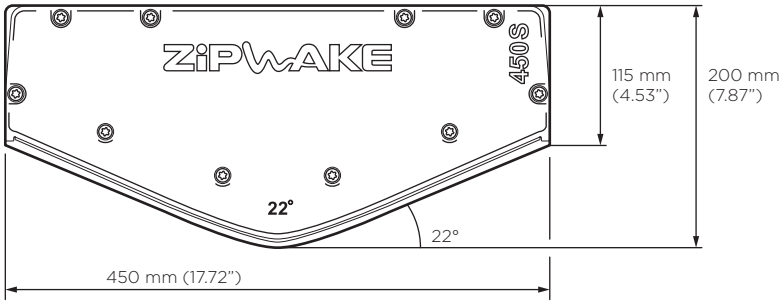

IT450-S CHINE PORT

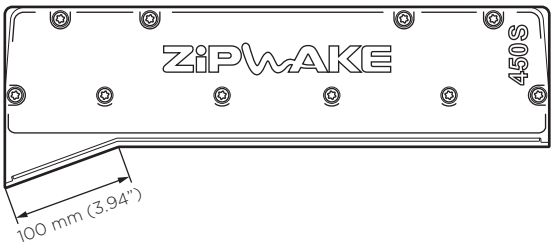

IT450-S CHINE STBD

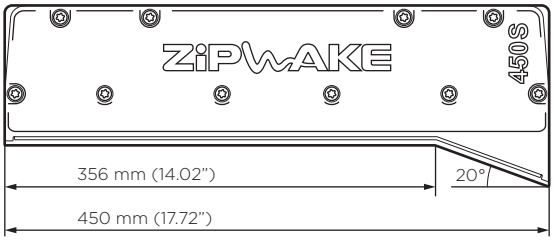

IT300-S CHINE PORT

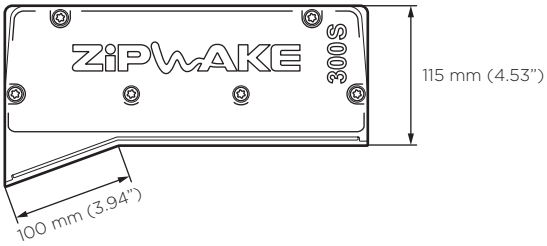

IT300-S CHINE STBD

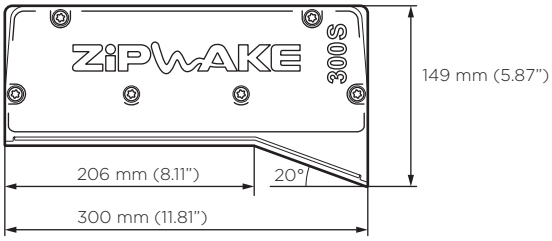

IT300-S INTER

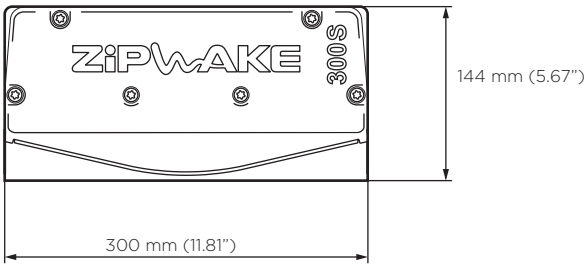

5 DISTRIBUTION UNIT

The Distribution Unit supplies the system with power and can accommodate up to six Series S interceptors.
The unit is connected to the main control panel. It is robust, waterproof, oil resistant and ignition protected for mounting in an engine room.
The power cable is included for easy connection to a battery. The distribution unit has built-in electrical protection, including its own protection fuse.

5.1 SPECIFICATIONS

Model	DU-S
Supply voltage	12 - 32 V DC
Power consumption	0.1 W max
Protection fuse	10 A ATO
Power cable	Length 4 m (13 ft), Diameter 9 mm (0.35 in), 12 AWG
Operating temperature	-20° to +85°C (-4° to +185°F)
Storage temperature	-40° to +90°C (-40° to +194°F)
Waterproof rating	IP67 with cables and/or protective caps mounted
Oil resistance	Common engine fluids
Compliance	CE, FCC, SAE J1171 Ignition Protected
Weight	0.9 kg (2 lbs) including the power cable

5.2 CONNECTORS

- Six interceptor connections
- I-BUS OUT (power and CAN bus to control panels)
- 2-lead power cable

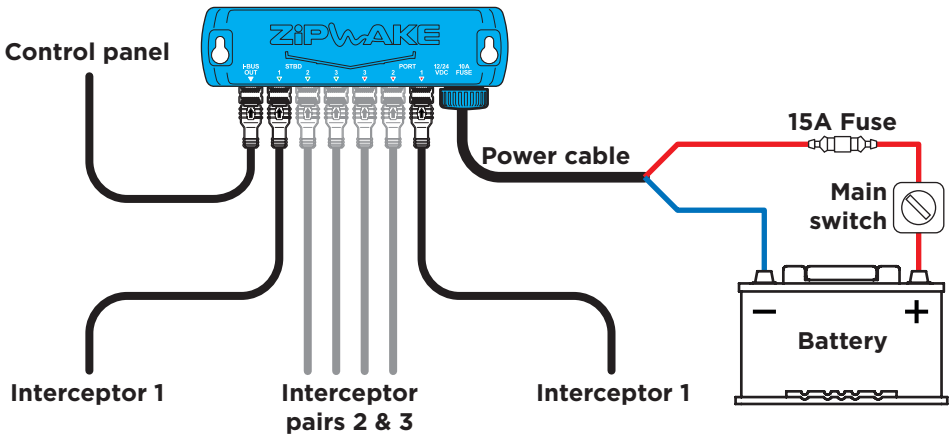

5.3 DIMENSIONS

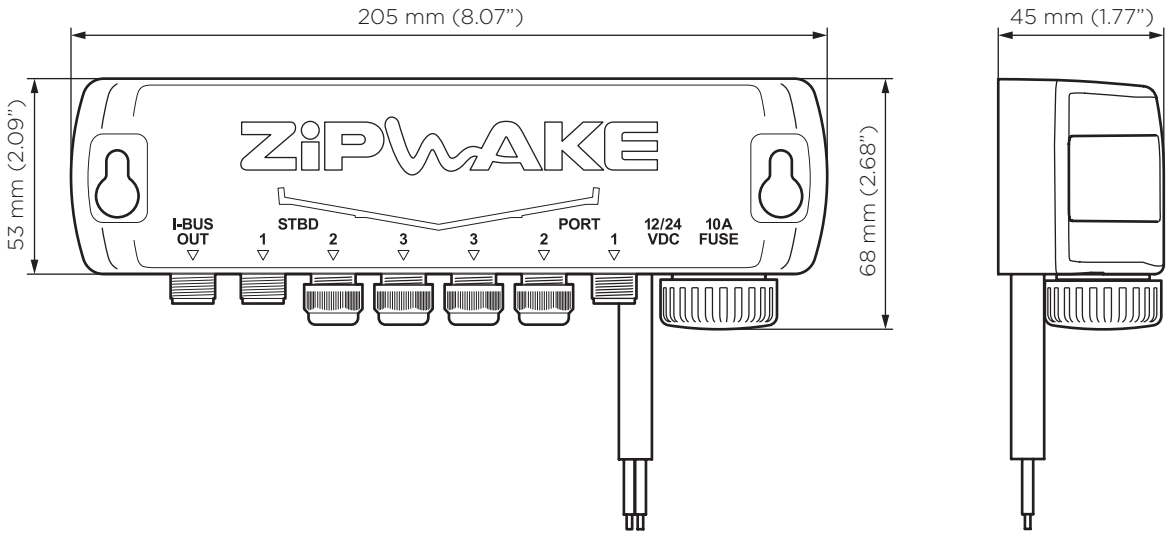

5.4 ORDERING DATA

Model	DU-S
Part No.	2011239 with Power Cable 4 m

- Included in Kit Boxes
- Available as an accessory
- Available as a spare part

6 CABLES

Model	Description
SC7-M12	Standard Cable 7 m (23 ft)
EC1.5-M12	Extension Cable 1.5 m (5 ft)
EC3-M12	Extension Cable 3 m (10 ft)
EC5-M12	Extension Cable 5 m (16 ft)
EC10-M12	Extension Cable 10 m (33 ft)

The standard cable is used to connect the main control panel to the distribution unit, usually located on or near the transom. This cable is also used to connect the main panel to the next panel, e.g. the flybridge. The standard cable can be extended by using any of the available extension cables.
The servo unit cable can be extended using 1.5 m or 3 m extension cables. The total servo cable length must not exceed 6 m (20 ft).

6.1 SPECIFICATIONS

Model	SC7-M12	EC1.5-M12	EC3-M12	EC5-M12	EC10-M12	
Weight	0.38 (0.84)	0.10 (0.22)	0.18 (0.40)	0.28 (0.62)	0.56 (1.23)	kg (lbs)
Connectors	M12 5-pin circular					
Connector diameter	14.5 mm (0.57 in)					
Cable material	Black PVC					
Rated current	4 A					
Waterproof rating	IP67 when connected					
Operating temperature	-20° to +85°C (-4° to +185°F)					
Storage temperature	-40° to +90°C (-40° to +194°F)					
Oil resistance	Common engine fluids					
Compliance	CE, FCC					

6.2 ORDERING DATA

Model	SC7-M12	EC1.5-M12	EC3-M12	EC5-M12	EC10-M12	
Part No.	2011257	2011258	2011259	2011260	2011261	

- Available as an accessory
- Available as a spare part

7 CONTROL PANEL ALU FRAME

The control panel for the Series S comes with a black chrome frame and a wheel cap in a glossy, black finish. A conversion kit is available for those who prefer a brushed aluminum finish. The kit includes simple instructions to make replacement an easy task.

7.1 SPECIFICATIONS

Model	CP ALU FRAME
Surface appearance	Brushed aluminum
Items in kit	1 x frame, 1 x wheel cap, 1 x instruction
Weight	0.03 kg (0.06 lbs)

7.2 ORDERING DATA

Model	CP ALU FRAME
Part No.	2011281

- Available as an accessory
- Available as a spare part

8 CONTROL PANEL COVER

Weather cover for the Series S control panel. Protects the display from the harsh marine environment when not in use. Fits standard surface mounted CP-S instrument. Available in five different colors to blend in with other instruments.

8.1 SPECIFICATIONS

Model	CP COVER
Surface appearance	Five different colors, soft-touch
Weight	0.05 kg (0.11 lbs)

8.2 ORDERING DATA

Model	CP COVER				
Color	☐ WHITE	☐ LIGHT GRAY	☐ MID GRAY	☐ DARK GRAY	☐ BLACK
Part No.	2011381	2011382	2011383	2011384	2011385

- Available as an accessory
- Available as a spare part

9 CONTROL PANEL GIMBAL BRACKET

When space is limited, the gimbal bracket provides a useful installation option for the Series S control panel. The gimbal bracket enables the control panel to be positioned at any angle between 0 and 360 degrees, and it comes with a cable gland that allows waterproof, open-sky installation.

9.1 SPECIFICATIONS

Model	GB
Items in kit	1 x bracket, 1 x frame, 10 x screws, 1 cable gland, 1 x instruction
Weight	0.12 kg (0.27 lbs)

9.2 DIMENSIONS

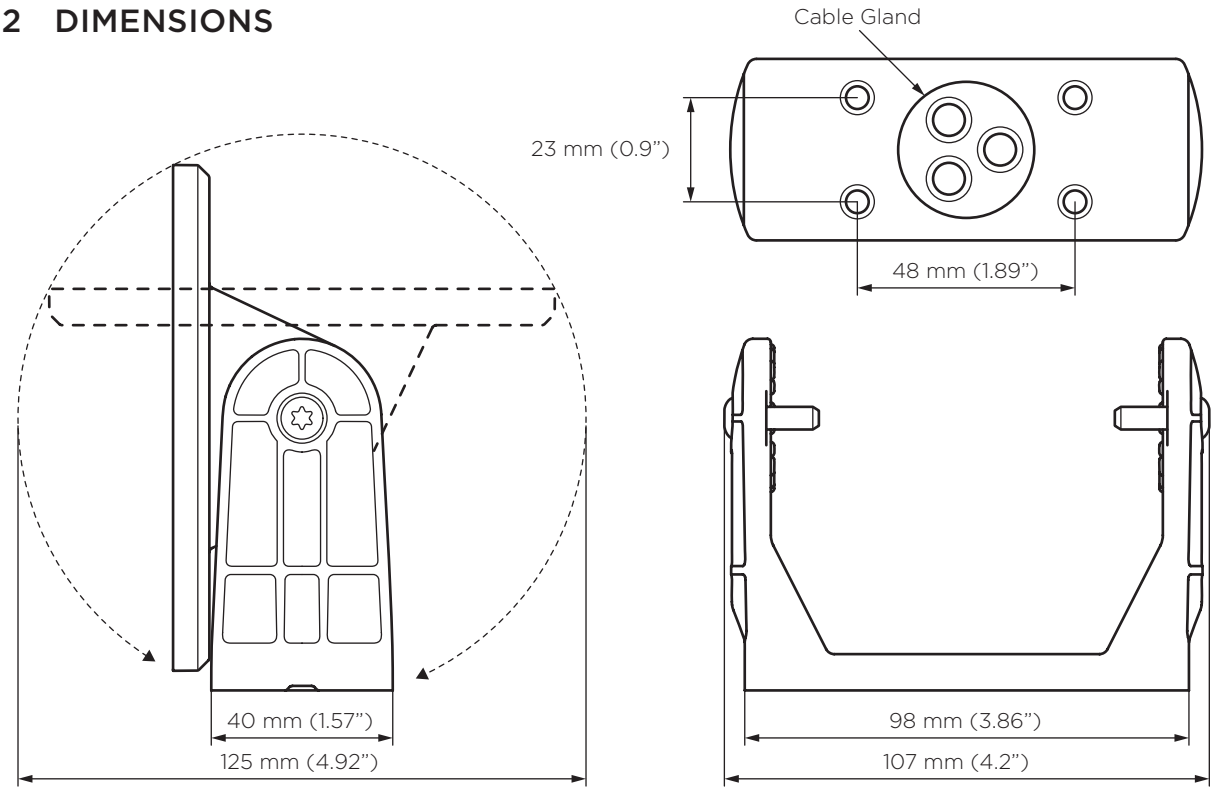

9.3 ORDERING DATA

Model	GB
Part No.	2011622

- Available as an accessory
- Available as a spare part

10 CABLE COVER

The thru-hull cable fitting of Series S interceptors can either be concealed behind the interceptor or positioned above the waterline. If the above-waterline mount is preferred, three parts are available to protect the cable: thru-hull cover, cable cover and a cable cover extension.

These parts are available as a cable cover kit to provide flexible routing of the cable on the transom.

10.1 SPECIFICATIONS

Model	CC-S
Items in kit	1 x thru-hull cover, 1 x cable cover 1 x cable cover extension 15 x screws
Weight	0.17 kg (0.37 lbs)

10.2 DIMENSIONS

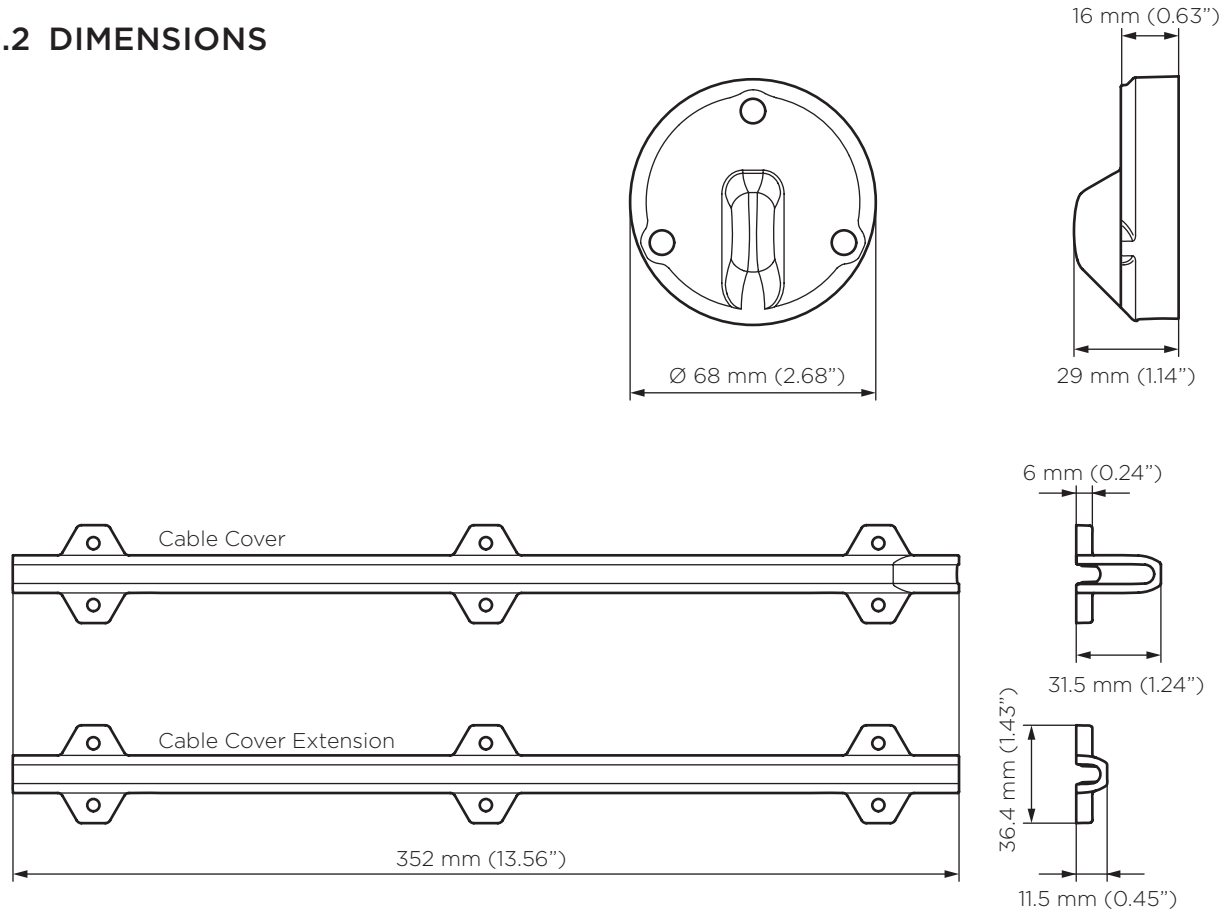

10.3 ORDERING DATA

Model	CC-S
Part No.	2011071 - Comes with each interceptor

- Available as an accessory
- Available as a spare part

11 SERVO UNIT

The Series S submersible electrical servo unit fits inside the interceptor, where it drives with precision the mechanism that provides linear motion to the interceptor blades. The unit is fast-acting, durable, calibration free and easy to install or replace. It comes with a rugged 3 m cable with a self-sealing thru-hull fitting.

11.1 SPECIFICATIONS

Model	SU-S
Servo motor type	Brushless DC with Hall sensors
Supply voltage	12 - 32 V DC
Power consumption	25 W max
Operating temperature	0° to +40°C (+32° to +104°F)
Storage temperature	-40° to +90°C (-40° to +194°F)
Waterproof rating	IP68 5 m (16 ft)
Compliance	CE, FCC
Cable length	3 m (10 ft), extendable up to 6 m (20 ft)
Cable material	PUR
Connector	M12 5-pin circular
Connector diameter	14.5 mm (0.57 in)
Weight	0.7 kg (1.5 lbs) including cable

11.2 ORDERING DATA

Model	SU-S
Part No.	2011230 with Cable 3 m

- Available as a spare part

12 INTERCEPTOR FRONTS

A front assembly comprises the interceptor's front housing, blade and assisting roller blade, the small parts that deal with blade linear motion and the set of screws required to mount the front to the back plate.

The front assemblies of the Series S interceptors have been designed to mitigate further damage to the interceptor in the rare event of contact with floating debris. Each interceptor model's front assembly is therefore available as a spare part.

12.1 SPECIFICATIONS

Refer to interceptor specifications in section 4.2.

12.2 DIMENSIONS

Refer to interceptor dimensions in section 4.4.

12.3 ORDERING DATA

Model	IT300-S FRONT	IT450-S FRONT	IT600-S FRONT	IT750-S FRONT
Part No.	2011252	2011253	2011254	2011255

- Available as a spare part

Model	IT450-S V13 FRONT	IT450-S V16 FRONT	IT450-S V19 FRONT	IT450-S V22 FRONT
Part No.	2011492	2011493	2011494	2011495

- Available as a spare part

Model	IT300-S CHINE PORT FRONT	IT300-S CHINE STBD FRONT	IT450-S CHINE PORT FRONT	IT450-S CHINE STBD FRONT
Part No.	2011742	2011743	2011744	2011745

- Available as a spare part

Model	IT300-S INTER FRONT
Part No.	2011741

- Available as a spare part

13 EXTERNAL GPS ANTENNA

The Zipwake external GPS antenna is a 5Hz, 20-channel receiver with excellent reception that provides accurate and rapid vessel position and speed updates. Vessel speed is a necessary input for the Zipwake's automatic motion controller. The antenna has a rugged construction, is fully waterproof and can be mast or surface mounted on any vessel.

13.1 APPLICATION

The external GPS is optional and intended for use when no other strong GPS signal is available for the Zipwake system, e.g. when the vessel has just one helm station with a shielding top (canopy) and lacks other accessible GPS sources. In this case, the external GPS antenna is a good solution. Its 5 m cable can be extended up to 15 m using Zipwake extension cables. It connects easily to the connector marked EXT GPS on the back of the control panel. The external GPS can be connected to any control panel installed in the system.

13.2 SPECIFICATIONS

Model	GPU
Connectors	M12 5-pin circular
Cable material	White PVC
Cable length	5 m (16 ft) extendable to max 15 m (49 ft)
Supply voltage	5 V DC ±5%
Power consumption	0.28 W, 55 mA (average)
Protocol	NMEA 0183 / RS232
NMEA sentences	RMC, VTG, GGA, GSA, GSV, GLL
Baud rate	38400
Update rate	5 Hz
Number of channels	20
Average time to first fix	Hot start 6 s, Warm start 38 s, Cold start 42 s
Operating temperature	-30° to +85°C (-22° to +185°F)
Storage temperature	-40° to +95°C (-40° to +203°F)
Waterproof rating	IP67
Compliance	CE, FCC
Weight	0.065 kg (0.14 lbs) without cable and connector
Mounting	Flush or pole

13.3 DIMENSIONS

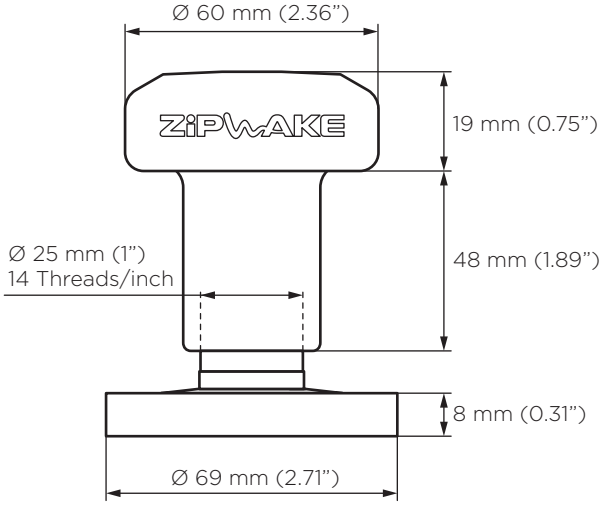

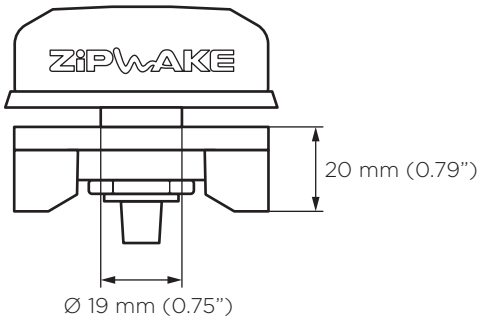

13.4 PIN OUT

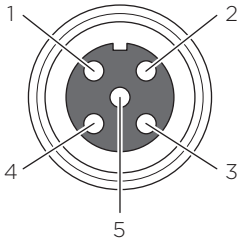

1	+5 V
2	RX (to GPS)
3	GND
4	Not connected
5	TX (from GPS)

13.5 ORDERING DATA

Model	GPU
Part No.	2011240 with Cable 5 m and Mount Kit

- Available as an accessory
- Available as a spare part

14 WIRING DIAGRAM

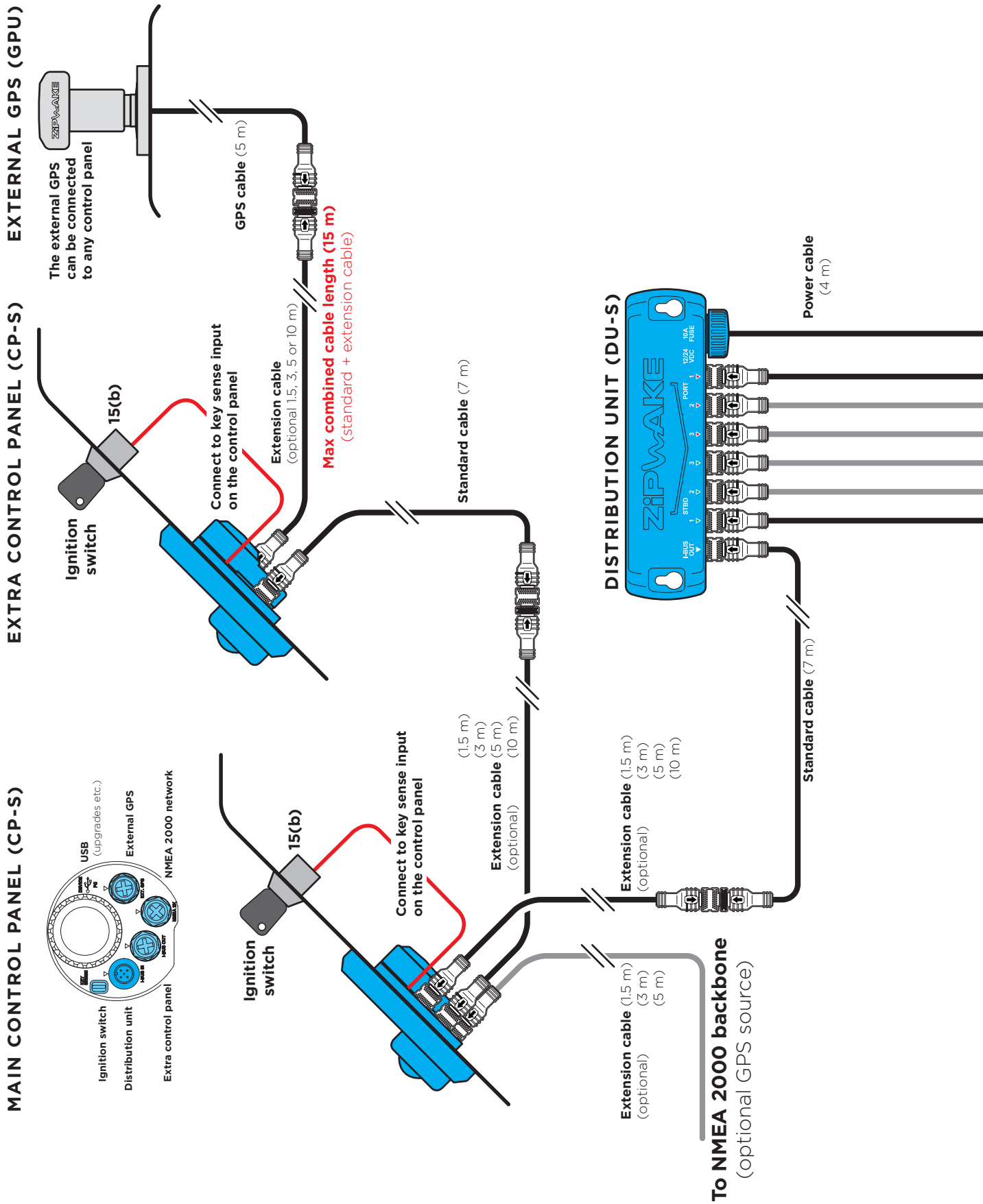

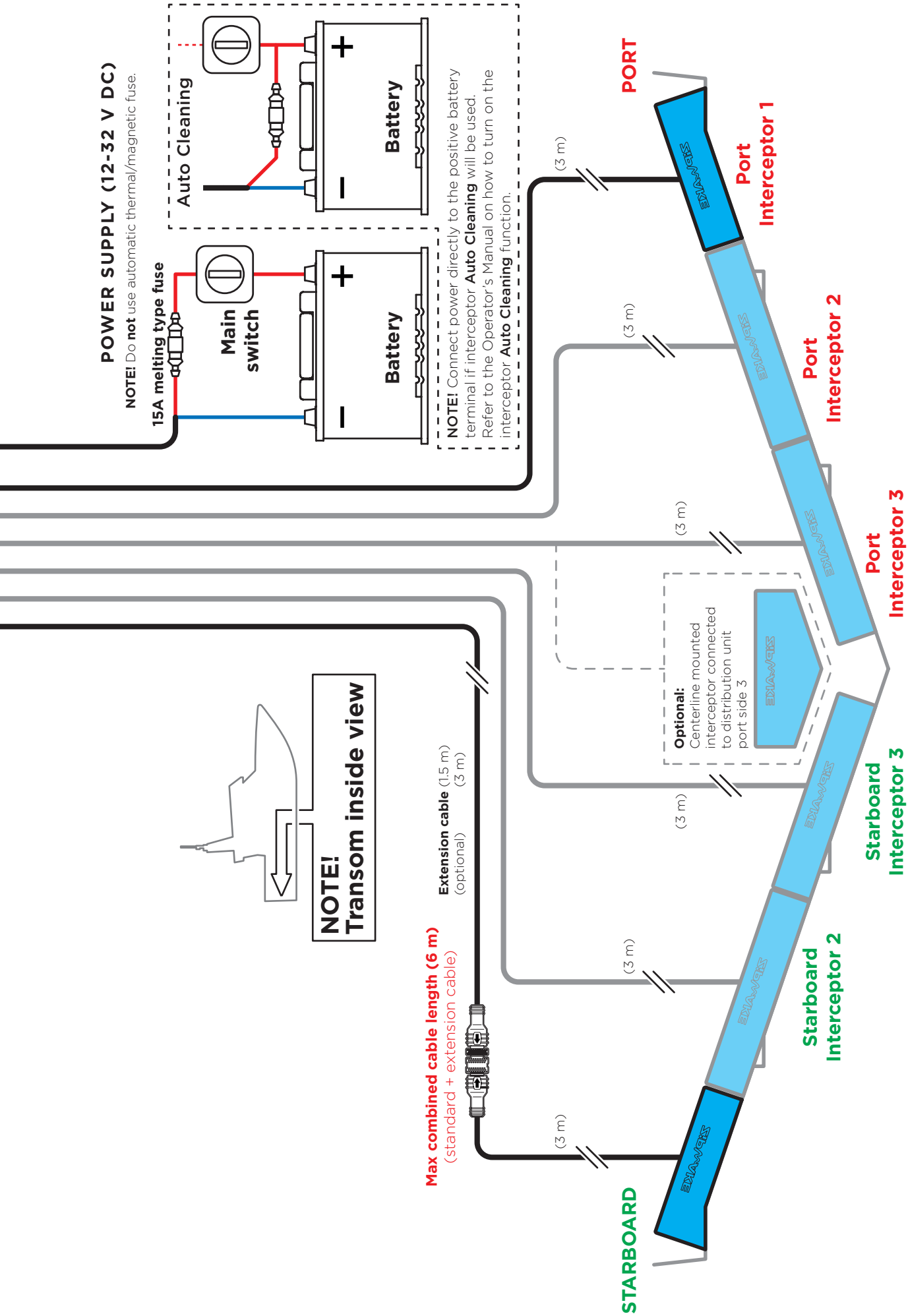
POWER SUPPLY (12-32 V DC)
NOTE! Do not use automatic thermal/magnetic fuse.
15A melting type fuse
Main switch
Battery
Auto Cleaning
Battery
NOTE! Connect power directly to the positive battery terminal if interceptor Auto Cleaning will be used. Refer to the Operator's Manual on how to turn on the interceptor Auto Cleaning function.
NOTE! Transom inside view
Extension cable (1.5 m) (3 m) (optional)
Max combined cable length (6 m) (standard + extension cable)
(3 m)
STARBOARD
Starboard Interceptor 2
Starboard Interceptor 3
Optional: Centerline mounted interceptor connected to distribution unit port side 3
Port Interceptor 3
Port Interceptor 2
Port Interceptor 1
PORT

ZiPWAKE

CHOOSE COMFORT. ENJOY PERFORMANCE.